Request for Approval of Design Exception(s) to AASHTO Guidelines

Submitted By: _____ _____ 6 / 26 / 26
Print Name | Signature | Date

To: Brad Reynolds
SCDOT Program Manager

PROJECT CHARACTERISTICS

County: LEXINGTON/RICHLAND
Project ID Number: P043329
Route Number: I-26
Route Name: I-26
From: MM 107.40
To: MM 108.70
Length 1.3 (miles)
Letting Date: _____
Work Description: Widening of I-26
Functional Classification: Interstate
Context: (Urban ☑ / Rural ☐)
Local Road/Street Group Designation (if applicable): (1 ☐ / 2 ☐ / 3 ☐ / 4 ☐)
Type of Terrain: (Level ☐ / Rolling ☑ / Mountainous ☐)
Design Speed: 60 (mph)

Present Year	ADT	% Trucks		Design Year	ADT	% Trucks
2025	127,500	9	/	2050	135,000	9

Is this a "Project of Divisional Interest," subject to FHWA/SCDOT Stewardship and Oversight Plan?
☑ Yes ☐ No

TOTAL PROJECT ESTIMATE ($) 430,000,000.00

CHECK APPROPRIATE BOX(ES) FOR DESIGN EXCEPTION(S)

- ☐ Design Speed
- ☐ Lane Width
- ☑ Shoulder Width
- ☐ Horizontal Curve Radius
- ☐ Superelevation Rate
- ☐ Stopping Sight Distance (SSD) (does not apply to sag vertical curves)
- ☐ Maximum Grade
- ☐ Cross Slope
- ☐ Vertical Clearance
- ☐ Design Loading Structural Capacity

ATTACH ADDITIONAL DOCUMENTATION

RECORD OF DECISION

Recommended by:

Engineer of Record Eichelberger, Jonathan D _____ Date 6/26/2026

Digitally signed by Eichelberger, Jonathan D
DN: E=Jonathan.Eichelberger@hdrinc.com, CN="Eichelberger, Jonathan D", OU=Users, OU=Columbia-1201 Main Street, OU=South Carolina, OU=United States, OU=Offices, DC=intranet, DC=hdr
Date: 2026.06.26 11:17:24-04'00'

Reviewed by:

SCDOT Program Manager _____ Date _____

Engineering Support Discipline Lead _____ Date _____

Approved by:

Director of Alternative Delivery _____ Date _____

Director of Engineering Support _____ Date _____

☐ Concur

FHWA _____ Date _____

(As needed per FHWA/SCDOT Stewardship and Oversight Plan)

cc:
FHWA
District Engineering Administrator
Director of Traffic Engineering
Chief Engineer for Project Delivery

Attachment A – Design Exception

Describe Elements for Design Exception:

The Carolina Crossroads Phase 3D Project consists of all work necessary to complete the design and reconstruction of the I-26 and I-126 system interchange and I-26 bridges over the Saluda River and CSX Railroad, in Lexington and Richland Counties. Work will include design and construction of interstate widening, riverine bridges, railroad bridges, retaining walls, and related roadway appurtenances. This design exception would allow narrow shoulders at very limited locations (spot locations) to accommodate median bridge pier protection and overhead sign supports that are constructed within the shoulder areas. Due to the location of the median bridge pier protection and overhead structure supports, the variance would be allowed in the inside shoulder. I-26 is a multilane interstate that use concrete barrier to divide the directions of travel. The existing inside shoulder width along this route is approximately 4.75'. Per AASHTO *A Policy on Geometric Design of Highways and Streets, 7th Edition (2018)* section 8.2.4, on freeways with six or more lanes, the paved width of the right and left shoulders should be 10 ft; where the DDHV for truck traffic exceeds 250 veh/h, a paved shoulder width of 12 ft should be considered. Due to direction distribution of trucks exceeding 250 veh/h, both the inside and outside shoulders are proposed to be increased and paved for the full 12' width.

Assuming an overhead sign structure foundation diameter of 4'-6", the resulting inside shoulder width would be reduced to 9'-7". The existing Bush River Rd. bridge over I-26 is proposed to be retained with newly constructed concrete median barrier pier protection for the existing bridge piers. Use of current SCDOT median bridge pier protection (Std. Dwg. 805-860-10, see Appendix B) results in the shoulder widths being reduced to 9'-8" underneath the Bush River Rd. Bridge. This design exception will allow shoulder width reductions at spot locations to be reduced to a minimum of 9'-7"' at overhead sign support locations and 9'-8" at the existing Bush River Rd. median bridge pier locations.

I-26 WB

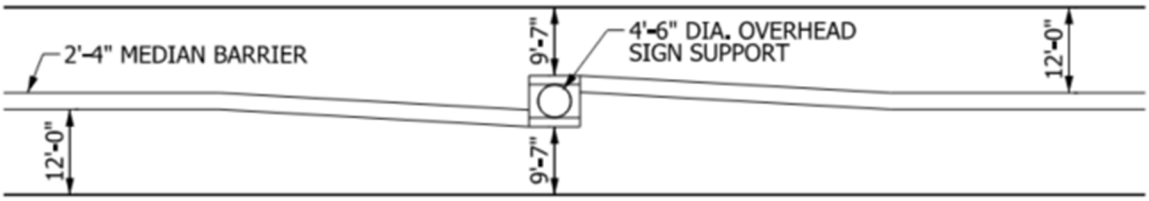

I-26 EB

I-26 WB

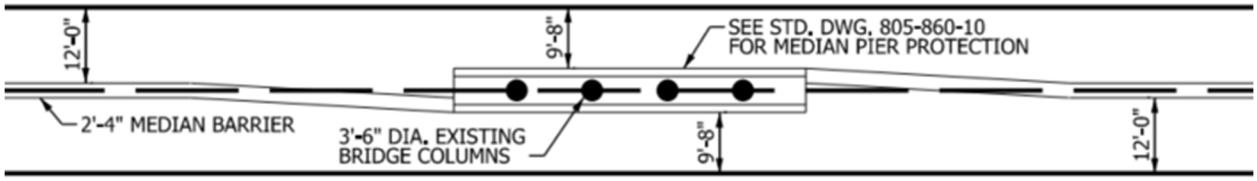

I-26 EB

Justification for Design Exception

The design exception is requested to allow spot locations where the shoulder would be less than AASHTO requirements (approximately 9'-7" at a minimum) but greater than the existing 4.75'. Stopping sight distance would still be provided per the contract documents for the design-build project. A predictive crash analysis was performed by the SCDOT Traffic Safety office in October 2019 as part of CCR Phase 2 and found no substantial increase in crash volumes between a 10' shoulder and 9' shoulder in either 5-lane or 4-lane sections. See Appendix A for Traffic Engineering Safety Review report.

Describe Steps to Eliminate Design Exception (include Costs):

To provide a 10' inside shoulder (AASHTO minimum), the crown point of I-26 in both directions would need to be shifted approximately 5" (2.5" each direction) for overhead sign support locations and 4" (2" each direction) for median bridge pier protection. This would then result in deflections of the horizontal alignment and introduce curves or tapers into the mainline geometry which is undesirable. Other strategies such as reduction in lane width to provide shoulder width were ruled out due to the traffic volume and truck percentage. Providing 12' lanes on the interstates is more desirable than narrowing the lane widths. Costs associated with the elimination of the design exception are negligible, however, this design exception follows project precedence with Phase 1, Phase 2, and Phase 3C where inside shoulder width design exceptions were approved and provides consistent application of shoulder width treatments throughout the entire Carolina Crossroads program.

How will future Construction Impact Design Exception:

Due to constraints of roadside development along this corridor, this project is considered the ultimate build-out for the corridor and no future lanes are anticipated.

APPENDIX A

October 14, 2019

TRAFFIC ENGINEERING SAFETY REVIEW

FROM: **State Traffic Safety Engineer Smith**

TO: **Christopher Lacy**

SUBJECT: Carolina Crossroads Project
Project ID P027662

Safety Comments

The Traffic Safety Office has completed an analysis of predicted crashes in regards to reduced shoulder widths at point locations along the interstate corridors that comprise the Carolina Crossroads project. The analysis was conducted to provide data driven decisions regarding the safety impacts for various inside shoulder widths at interchanges and overpasses where guidance may be needed to save or replace existing structures.

As Carolina Crossroads is proceeding as a design build project, exact design elements and geometrics are not currently known, but a high level alternatives analysis using the IHSDM software could be conducted to determine impacts. A reduced inside shoulder width at a bridge was considered to be a 'point' along the corridor. It is understood that trying to determine the exact predicted crash rate at a single point along a corridor will not yield accurate results, and should only be used as a guide to review the trends as variables are changed. The results are not considered a full predicted analysis and lack the full input of data to complete a project specific HSM analysis. Additionally, results are for internal SCDOT use only in relation to this project and analysis only. These results should not be used to solely justify decisions on this project, or any project, without full review of all contextual elements involved within.

In order to complete the requested review, a sample interstate corridor similar to the proposed cross sections provided with the request was modeled. This sample model consisted of a 0.25 mile section of 4-lane interstate and 5-lane interstate. Projected AADT's were input as 90,000 and 100,000 VPD in the years 2020 and 2040 for the 4-lane section; along with 120,000 and 130,000 VPD for the 5-lane section. In order to get a baseline prediction of crashes for comparison, a maximum straight shoulder width of 12' was used to estimate a total number of crashes over a ten year period for the given conditions of each theoretical corridor. Subsequent crash totals were modeled by reducing the inside shoulder width for a section of the corridor to estimate the effects of a narrower inside shoulder at a point on the interstate due to interchange bridge piers and or barriers. The reduced shoulder widths were modeled for a length of approximately 225', of which 95' was the length of the fully reduced width, along with variable widths before and after this reduced width due to the leading and trailing tapers. These taper lengths started from a full 12' width shoulder, and tapered for a length of approximately 65'. The reduced shoulder widths that were sampled are as follows; 4.75', 6', 7', 8', 9', 9.75', 10', & 11' and are shown in the table below. Also shown is a sample plan view produced from the IHSDM software.

5-lane 12'-4.75' taper shoulders

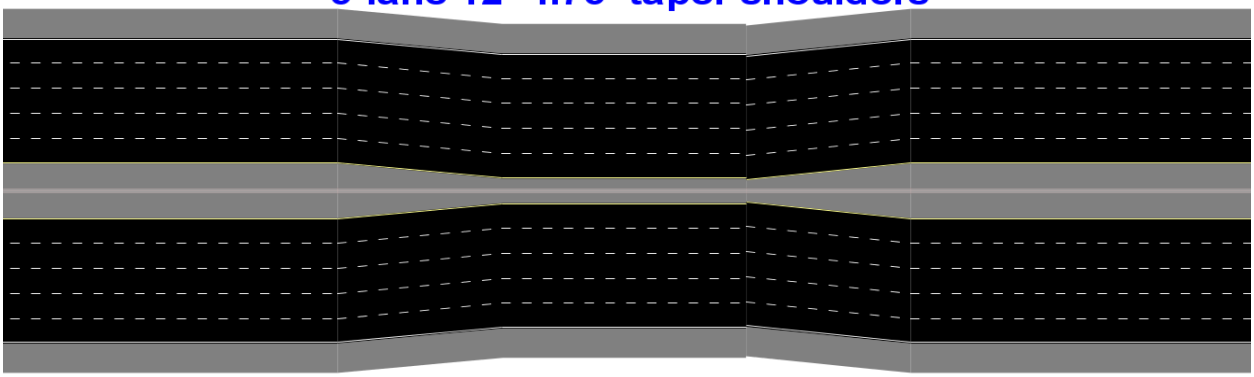

Results from the Crash Prediction Module* of the IHSDM are as follows**:

5-Lane Interstate Corridor									
Reduced Shoulder Width at Bridge	**4.75' (Existing)**	**6.0'**	**7.0'**	**8.0'**	**9.0'**	**9.75' (Proposed)**	**10.0' (Required)**	**11'**	**12' No reduction in shoulder width**
Total Crashes (10 years)	70.9	70.7	70.6	70.5	70.4	70.3	70.2	70.1	69.9

4-Lane Interstate Corridor									
Reduced Shoulder Width at Bridge	**4.75' (Existing)**	**6.0'**	**7.0'**	**8.0'**	**9.0'**	**9.75' (Proposed)**	**10.0' (Required)**	**11'**	**12' (No change)**
Total Crashes (10 years)	55.8	55.6	55.5	55.4	55.3	55.2	55.2	55.1	55.0

*Complete Crash Prediction Module Reports showing further details and additional results are provided with this summary document for further review. **Based on SCDOT calibration and crash distributions

Summary

For the conditions outlined above and used in the IHSDM, results predict that there would be approximately 1 additional crash every 10 years in the worst case scenario of reducing the inside shoulder width from 12' to 4.75' for approximately 225'. There was practically no additional crash experience between the proposed 9.75' and minimum required width of 10.0'

Based upon these results with the provided input values, there does not appear to be any adverse safety effects at these point locations due to a reduction in shoulder widths.

Duncan Smith

TYPICAL SECTION OF IMPROVEMENT
SOUTH CAROLINA DEPARTMENT OF TRANSPORTATION
COLUMBIA, SC

FED. RD. DIV. NO.	STATE	COUNTY	PROJECT ID	ROAD/ROUTE NO.	SHEET NO.
3	S.C.	LEXINGTON/RICHLAND	P039721 P039722	I-26	3

NOTES:

SUPERELEVATION OF PAVEMENT AND SHOULDERS VARIES, SEE CROSS SECTIONS FOR DETAILS

* < 5.0' USE 6:1 SLOPE
5.0' – 10.0' USE 4:1 SLOPE
> 10.0' USE 2:1 SLOPE

** ADD 3.75' WHERE GUARDRAIL IS ERECTED. SEE SCDOT STANDARD DRAWING NO. 805-220-00 AND CROSS SECTIONS FOR LOCATION OF EXTRA LENGTH POSTS

*** PLACE MILLED IN RUMBLE STRIPS IN ACCORDANCE WITH STANDARD DRAWING 401-205-01 & 401-205-02

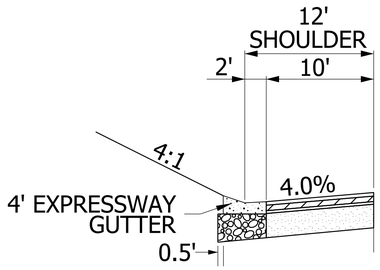

USE FROM
STA. 58+50 TO 62+50 LT
STA. 142+87.39 TO 145+42.39 RT

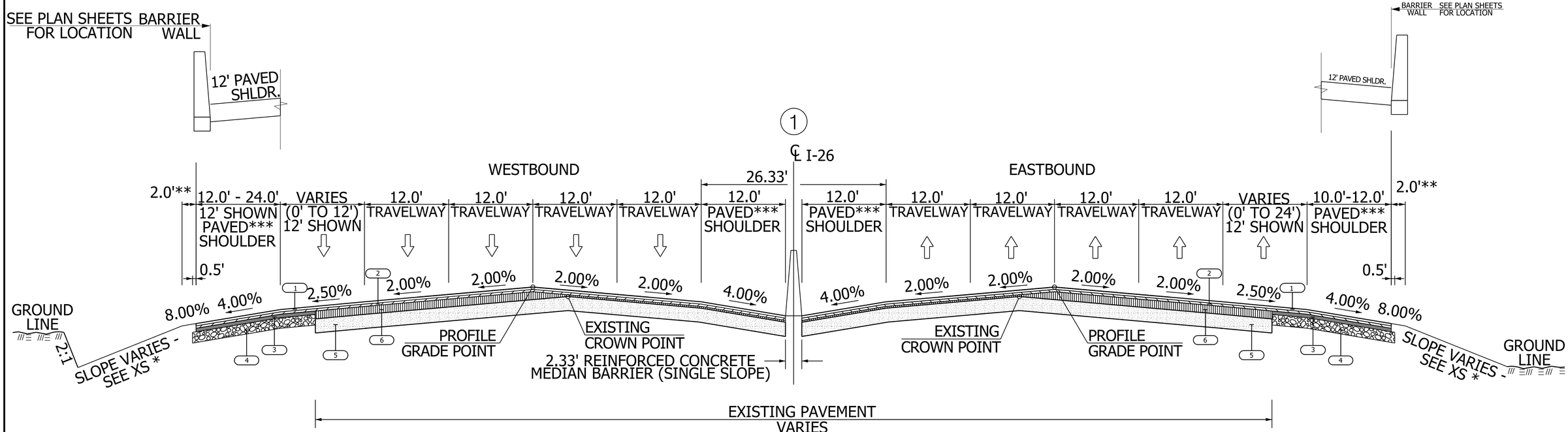

USE THIS SECTION ON:
I-26 STA. 4+49.12 TO 246+20.00

PAVEMENT LEGEND

1	HOT MIX ASPHALT SURFACE COURSE (TYPE A) (200 PSY)
2	HOT MIX ASPHALT INTERMEDIATE COURSE (TYPE B) (200 PSY)
3	HOT MIX ASPHALT INTERMEDIATE COURSE (TYPE A) (300 PSY)
4	HOT MIX ASPHALT BASE COURSE (TYPE A) (1100 PSY)
5	EXISTING PAVEMENT (RETAIN)
6	HOT MIX ASPHALT INTERMEDIATE COURSE FOR BUILD-UP (TYPE A) (VARIABLE)

FUNCTIONAL CLASS

URBAN ARTERIAL FREEWAY

HDR ENGINEERING INC.
OF THE CAROLINAS

1201 MAIN STREET
SUITE 800
COLUMBIA, SC 29201
803-509-6600

RTE.	DESIGN SPEED	
MPH	FROM STA	TO STA
60 MPH	4+49.12	246+20
EXCEPTIONS TO DESIGN SPEED		

PAVEMENT DESIGN

SOUTH CAROLINA
DEPARTMENT OF TRANSPORTATION
COLUMBIA, SC

CAROLINA CROSSROADS
TYPICAL SECTION

SCALE NTS

sctypi.dgn

2017 FREEWAY SEGMENT AADT

Year 2017

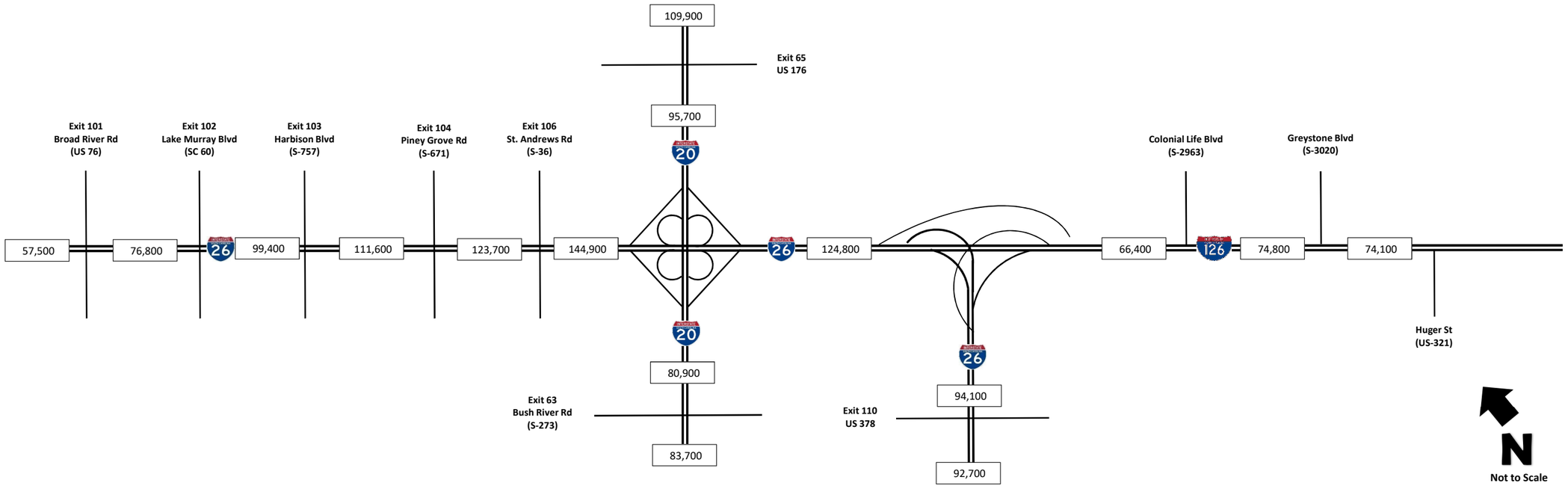

2020 ESTIMATED FREEWAY SEGMENT AADT

Design Year 2020
Growth Rate 0.70%

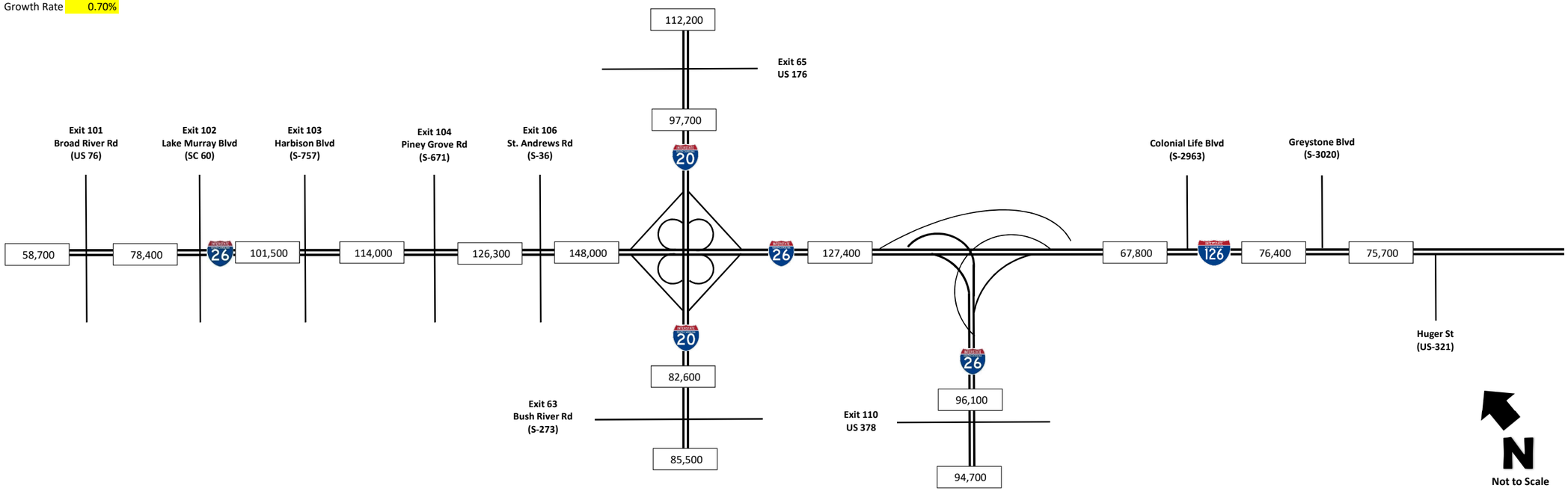

2040 ESTIMATED FREEWAY SEGMENT AADT

Design Year 2040
Growth Rate 0.70%

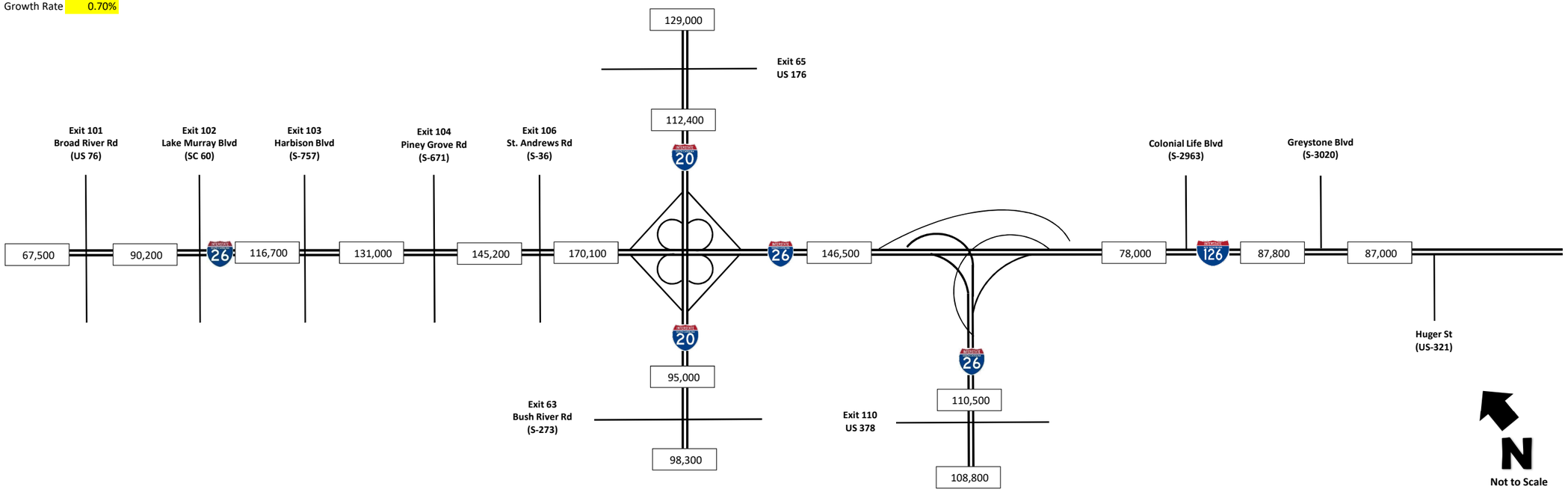

OBJECTID	Crash Number	Crash Date	County	Route Type (Main)	Route Number (Main)	Route Aux (Main)	Route Name (Main)	Milepoint	Route Type (Base)	Route Number (Base)	Route Aux (Base)	Route Name (Base)	Number Fatalities	Number Killed or Seriously Injured	Number Injured	Max Injury Code	Crash Harmful Event	Manner of Collision	Prime Contributing Factor	Crash Time	Day of the Week	Rd Surface Conditions	Light Conditions	Speed Involved	DTTFC Involved	Number of Units Involved	Unbelted Total Count	Second Route Category Name	Second Route Number	Second Route Auxiliary Name	Sec St Name	Base Distance Offset BDO	Base Distance Offset Direction Name	Latitude	Longitude	Main Route LRS	HDR_Zone	Max_Injury_ Code_Int	Max_Injury_ Code_EPDO
3536	22266260	18-Aug-22	RICHLAND	INTERSTATE	26	MAINLINE	INTERSTATE 26	100.964	US ROUTE	76	MAINLINE	BROAD RIVER RD	0	0	1	Possible Injury	Median Barrier	Rear End	Driving too Fast for Conditions	7:50	Thursday	Dry	Daylight	No	No	4	0	SECONDARY ROAD	58	MAINLINE	KOON RD	100 E		34.1031	-81.17924	40010002600E	I-26 Zone B	1	11
2047	23221718	13-Feb-23	RICHLAND	INTERSTATE	26	MAINLINE	INTERSTATE 26	100.967	US ROUTE	76	MAINLINE	BROAD RIVER RD	0	0	1	Minor Injury	Median Barrier	Sideswipe, Same Direction	Improper Lane use/change	19:00	Monday	Dry	Night	No	No	4	0	SECONDARY ROAD	58	MAINLINE	KOON RD	44 W		34.10307	-81.1792	40010002600E	I-26 Zone B	2	17
3342	22280526	30-Sep-22	RICHLAND	INTERSTATE	26	MAINLINE	INTERSTATE 26	101.008	US ROUTE	76	MAINLINE	BROAD RIVER RD	0	0	0	No Injury	Other (Wall, Building, Tunnel, etc)	Non Collision	Tires/Wheel	12:20	Friday	Wet	Daylight	No	Yes	1	0	SECONDARY ROAD	58	MAINLINE	KOON RD	10 E		34.10262	-81.17873	40010002600E	I-26 Zone B		1
3923	22243227	18-Jun-22	RICHLAND	INTERSTATE	26	MAINLINE	INTERSTATE 26	101.008	US ROUTE	76	MAINLINE	BROAD RIVER RD	0	0	0	No Injury	Median Barrier	Non Collision	Driving too Fast for Conditions	23:00	Saturday	Dry	Night	No	No	1	0	SECONDARY ROAD	58	MAINLINE	KOON RD	50 W		34.10262	-81.17873	40010002600E	I-26 Zone B		1
6716	21221145	7-Mar-21	RICHLAND	INTERSTATE	26	MAINLINE	INTERSTATE 26	101.142	US ROUTE	76	MAINLINE	BROAD RIVER RD	0	0	0	No Injury	Median Barrier	Sideswipe, Same Direction	Improper Lane use/change	18:20	Sunday	Dry	Daylight	No	No	2	0	SECONDARY ROAD	58	MAINLINE	KOON RD	10 W		34.10115	-81.1772	40010002600E	I-26 Zone B		1
1040	23282822	17-Sep-23	RICHLAND	INTERSTATE	26	MAINLINE	INTERSTATE 26	101.164	US ROUTE	76	MAINLINE	BROAD RIVER RD	0	0	0	No Injury	Other (Wall, Building, Tunnel, etc)	Sideswipe, Same Direction	Improper Lane use/change	10:00	Sunday	Wet	Daylight	No	No	2	0	SECONDARY ROAD	58	MAINLINE	KOON RD	50 W		34.10091	-81.17695	40010002600E	I-26 Zone B		1
835	23295676	31-Oct-23	RICHLAND	INTERSTATE	26	MAINLINE	INTERSTATE 26	101.208	US ROUTE	76	MAINLINE	BROAD RIVER RD	0	0	1	Possible Injury	Median Barrier	Non Collision	Driving too Fast for Conditions	12:10	Tuesday	Dry	Daylight	No	No	1	0	SECONDARY ROAD	58	MAINLINE	KOON RD	50 E		34.10043	-81.17644	40010002600E	I-26 Zone B	1	11
2923	22308807	20-Dec-22	RICHLAND	INTERSTATE	26	MAINLINE	INTERSTATE 26	101.233	US ROUTE	76	MAINLINE	BROAD RIVER RD	0	0	1	Minor Injury	Median Barrier	Non Collision	Driving too Fast for Conditions	22:25	Tuesday	Wet	Night	No	No	1	0	SECONDARY ROAD	58	MAINLINE	KOON RD	10 W		34.10016	-81.17615	40010002600E	I-26 Zone B	2	17
6459	21235725	5-May-21	RICHLAND	INTERSTATE	26	MAINLINE	INTERSTATE 26	101.328	US ROUTE	76	MAINLINE	BROAD RIVER RD	0	0	0	No Injury	Median Barrier	Non Collision	Driving too Fast for Conditions	2:30	Wednesday	Dry	Night	No	No	1	0	SECONDARY ROAD	58	MAINLINE	KOON RD	400 W		34.09913	-81.17505	40010002600E	I-26 Zone B		1
920	23290426	19-Oct-23	RICHLAND	INTERSTATE	26	MAINLINE	INTERSTATE 26	101.341	US ROUTE	76	MAINLINE	BROAD RIVER RD	0	0	0	No Injury	Median Barrier	Sideswipe, Same Direction	Improper Lane use/change	17:30	Tuesday	Dry	Daylight	No	No	2	0	SECONDARY ROAD	58	MAINLINE	KOON RD	120 E		34.09899	-81.17489	40010002600E	I-26 Zone B		1
2187	23212990	11-Jan-23	RICHLAND	INTERSTATE	26	MAINLINE	INTERSTATE 26	101.649	US ROUTE	76	MAINLINE	BROAD RIVER RD	0	0	0	No Injury	Median Barrier	Sideswipe, Same Direction	Improper Lane use/change	17:00	Wednesday	Dry	Daylight	No	No	2	0	SC ROUTE	60	MAINLINE	LAKE MURRAY BLVD	1 E		34.09571	-81.17124	40010002600E	I-26 Zone B		1
3766	22253002	29-Jun-22	RICHLAND	INTERSTATE	26	MAINLINE	INTERSTATE 26	101.718	US ROUTE	76	MAINLINE	BROAD RIVER RD	0	0	0	No Injury	Median Barrier	Sideswipe, Same Direction	Improper Lane use/change	13:00	Wednesday	Wet	Daylight	No	No	2	0	SC ROUTE	60	MAINLINE	LAKE MURRAY BLVD	27 E		34.09498	-81.17042	40010002600E	I-26 Zone B		1
970	23286864	23-Sep-23	RICHLAND	INTERSTATE	26	MAINLINE	INTERSTATE 26	101.752	US ROUTE	76	MAINLINE	BROAD RIVER RD	0	0	0	No Injury	Median Barrier	Non Collision	Driving too Fast for Conditions	3:10	Saturday	Dry	Night	No	No	1	0	SC ROUTE	60	MAINLINE	LAKE MURRAY BLVD	10 W		34.09459	-81.16999	40010002600E	I-26 Zone B		1
1354	23262228	11-Jul-23	RICHLAND	INTERSTATE	26	MAINLINE	INTERSTATE 26	101.766	US ROUTE	76	MAINLINE	BROAD RIVER RD	0	0	0	No Injury	Median Barrier	Non Collision	Driving too Fast for Conditions	7:10	Tuesday	Dry	Daylight	No	No	1	0	SC ROUTE	60	MAINLINE	LAKE MURRAY BLVD	50 W		34.09443	-81.1698	40010002600E	I-26 Zone B		1
3283	22283880	8-Oct-22	RICHLAND	INTERSTATE	26	MAINLINE	INTERSTATE 26	101.766	US ROUTE	76	MAINLINE	BROAD RIVER RD	0	0	5	Possible Injury	Median Barrier	Rear End	Driving too Fast for Conditions	12:20	Saturday	Dry	Daylight	No	No	4	0	SC ROUTE	60	MAINLINE	LAKE MURRAY BLVD	50 E		34.09443	-81.16981	40010002600E	I-26 Zone B	1	11
3806	22250641	24-Jun-22	RICHLAND	INTERSTATE	26	MAINLINE	INTERSTATE 26	101.987	SC ROUTE	60	MAINLINE	LAKE MURRAY BLVD	0	0	1	Possible Injury	Median Barrier	Rear End	Driving too Fast for Conditions	14:45	Friday	Dry	Daylight	No	No	2	0	US ROUTE	76	MAINLINE	BROAD RIVER RD	28 W		34.09189	-81.167	40010002600E	I-26 Zone B	1	11
4532	22204678	21-Jan-22	RICHLAND	INTERSTATE	26	MAINLINE	INTERSTATE 26	101.987	SC ROUTE	60	MAINLINE	LAKE MURRAY BLVD	0	0	0	No Injury	Median Barrier	Sideswipe, Same Direction	Improper Lane use/change	22:50	Friday	Wet	Night	No	No	2	0	US ROUTE	76	MAINLINE	BROAD RIVER RD	233 E		34.09189	-81.167	40010002600E	I-26 Zone B		1
6931	21206776	19-Jan-21	RICHLAND	INTERSTATE	26	MAINLINE	INTERSTATE 26	101.987	SC ROUTE	60	MAINLINE	LAKE MURRAY BLVD	0	0	0	No Injury	Median Barrier	Non Collision	Driving too Fast for Conditions	17:00	Tuesday	Dry	Daylight	Yes	No	1	0	US ROUTE	76	MAINLINE	BROAD RIVER RD	10 W		34.09189	-81.167	40010002600E	I-26 Zone B		1
6971	21203544	1-Jan-21	RICHLAND	INTERSTATE	26	MAINLINE	INTERSTATE 26	101.987	SC ROUTE	60	MAINLINE	LAKE MURRAY BLVD	0	0	0	No Injury	Median Barrier	Non Collision	Driving too Fast for Conditions	21:15	Friday	Wet	Night	No	No	1	0	US ROUTE	76	MAINLINE	BROAD RIVER RD	25 E		34.09189	-81.167	40010002600E	I-26 Zone B		1
5818	21268718	21-Aug-21	RICHLAND	INTERSTATE	26	MAINLINE	INTERSTATE 26	102.219	SC ROUTE	60	MAINLINE	LAKE MURRAY BLVD	0	0	1	Serious Injury	Median Barrier	Rear End	Under the Influence	0:30	Saturday	Dry	Night	Yes	No	2	0	US ROUTE	76	MAINLINE	BROAD RIVER RD	30 E		34.08947	-81.16434	40010002600E	I-26 Zone B	3	55
2232	23208401	11-Feb-23	RICHLAND	INTERSTATE	26	MAINLINE	INTERSTATE 26	102.289	SC ROUTE	60	MAINLINE	LAKE MURRAY BLVD	0	0	0	No Injury	Median Barrier	Non Collision	Driving too Fast for Conditions	22:00	Saturday	Wet	Night	No	No	1	0	SECONDARY ROAD	757	MAINLINE	HARBISON BLVD	50 E		34.08872	-81.16358	40010002600E	I-26 Zone B		1
1443	23256388	21-Jun-23	RICHLAND	INTERSTATE	26	MAINLINE	INTERSTATE 26	102.317	SC ROUTE	60	MAINLINE	LAKE MURRAY BLVD	0	0	0	No Injury	Median Barrier	Non Collision	Driving too Fast for Conditions	2:40	Wednesday	Wet	Night	No	No	1	0	SECONDARY ROAD	757	MAINLINE	HARBISON BLVD	1 W		34.08842	-81.16328	40010002600E	I-26 Zone B		1
3557	22264918	17-Aug-22	RICHLAND	INTERSTATE	26	MAINLINE	INTERSTATE 26	102.383	SC ROUTE	60	MAINLINE	LAKE MURRAY BLVD	0	0	0	No Injury	Median Barrier	Non Collision	Driving too Fast for Conditions	10:55	Wednesday	Wet	Daylight	No	No	1	0	SECONDARY ROAD	757	MAINLINE	HARBISON BLVD	30 E		34.08772	-81.16257	40010002600E	I-26 Zone B		1
1914	23228611	26-Mar-23	RICHLAND	INTERSTATE	26	MAINLINE	INTERSTATE 26	102.406	SC ROUTE	60	MAINLINE	LAKE MURRAY BLVD	0	0	0	No Injury	Median Barrier	Non Collision	Driving too Fast for Conditions	18:10	Sunday	Wet	Daylight	No	No	1	0	SECONDARY ROAD	757	MAINLINE	HARBISON BLVD	41 E		34.08747	-81.16232	40010002600E	I-26 Zone B		1
5929	21263381	30-Jul-21	RICHLAND	INTERSTATE	26	MAINLINE	INTERSTATE 26	102.54	SC ROUTE	60	MAINLINE	LAKE MURRAY BLVD	0	0	0	No Injury	Median Barrier	Sideswipe, Same Direction	Improper Lane use/change	16:23	Friday	Dry	Daylight	No	No	2	0	SECONDARY ROAD	757	MAINLINE	HARBISON BLVD	54 E		34.08603	-81.16088	40010002600E	I-26 Zone B		1
3797	22251231	2-Jul-22	RICHLAND	INTERSTATE	26	MAINLINE	INTERSTATE 26	102.715	SC ROUTE	60	MAINLINE	LAKE MURRAY BLVD	0	0	0	No Injury	Median Barrier	Sideswipe, Same Direction	Improper Lane use/change	21:50	Saturday	Dry	Night	No	No	2	0	SECONDARY ROAD	757	MAINLINE	HARBISON BLVD	50 E		34.08411	-81.15896	40010002600E	I-26 Zone B		1
5235	21460425	11-Dec-21	RICHLAND	INTERSTATE	26	MAINLINE	INTERSTATE 26	102.769	SC ROUTE	60	MAINLINE	LAKE MURRAY BLVD	0	0	0	No Injury	Median Barrier	Non Collision	Driving too Fast for Conditions	18:30	Saturday	Wet	Night	Yes	No	1	0	SECONDARY ROAD	757	MAINLINE	HARBISON BLVD	81 E		34.08351	-81.15836	40010002600E	I-26 Zone B		1
1385	23260493	20-Jul-23	RICHLAND	INTERSTATE	26	MAINLINE	INTERSTATE 26	102.88	SECONDARY ROAD	757	MAINLINE	HARBISON BLVD	0	0	0	No Injury	Median Barrier	Non Collision	Driving too Fast for Conditions	20:40	Thursday	Wet	Night	No	No	1	0	SC ROUTE	60	MAINLINE	LAKE MURRAY BLVD	100 E		34.08227	-81.15713	40010002600E	I-26 Zone B		1
1659	23244239	7-May-23	RICHLAND	INTERSTATE	26	MAINLINE	INTERSTATE 26	102.88	SECONDARY ROAD	757	MAINLINE	HARBISON BLVD	0	0	2	Minor Injury	Median Barrier	Rear End	Driving too Fast for Conditions	15:00	Sunday	Dry	Daylight	No	No	2	0	SC ROUTE	60	MAINLINE	LAKE MURRAY BLVD	13 W		34.08227	-81.15713	40010002600E	I-26 Zone B	2	17
7003	21201239	14-Jan-21	RICHLAND	INTERSTATE	26	MAINLINE	INTERSTATE 26	102.88	SECONDARY ROAD	757	MAINLINE	HARBISON BLVD	0	0	0	No Injury	Median Barrier	Sideswipe, Same Direction	Failure to Yield RoW	14:00	Thursday	Dry	Daylight	No	No	3	0	SC ROUTE	60	MAINLINE	LAKE MURRAY BLVD	2 W		34.08227	-81.15713	40010002600E	I-26 Zone B		1
3384	22277179	19-Sep-22	RICHLAND	INTERSTATE	26	MAINLINE	INTERSTATE 26	103.008	SECONDARY ROAD	757	MAINLINE	HARBISON BLVD	0	0	0	No Injury	Other (Wall, Building, Tunnel, etc)	Rear End	Driving too Fast for Conditions	7:35	Monday	Dry	Daylight	No	No	3	0	SC ROUTE	60	MAINLINE	LAKE MURRAY BLVD	100 E		34.08083	-81.15571	40010002600E	I-26 Zone B		1
3668	22258469	21-Jul-22	RICHLAND	INTERSTATE	26	MAINLINE	INTERSTATE 26	103.179	SECONDARY ROAD	757	MAINLINE	HARBISON BLVD	0	0	1	Possible Injury	Median Barrier	Rear End	Under the Influence	17:20	Thursday	Dry	Daylight	Yes	No	2	0	SC ROUTE	60	MAINLINE	LAKE MURRAY BLVD	10 W		34.07937	-81.15424	40010002600E	I-26 Zone B	1	11
3007	22302777	29-Nov-22	RICHLAND	INTERSTATE	26	MAINLINE	INTERSTATE 26	103.386	SECONDARY ROAD	757	MAINLINE	HARBISON BLVD	0	0	0	No Injury	Median Barrier	Rear End	Driving too Fast for Conditions	7:30	Tuesday	Dry	Daylight	No	No	2	0	SC ROUTE	60	MAINLINE	LAKE MURRAY BLVD	11 E		34.07768	-81.15255	40010002600E	I-26 Zone B		1
6882	21209917	16-Feb-21	LEXINGTON	INTERSTATE	26	MAINLINE	INTERSTATE 26	103.531	SECONDARY ROAD	671	MAINLINE	PINEY GROVE RD	0	0	0	No Injury	Median Barrier	Non Collision	Driving too Fast for Conditions	8:20	Tuesday	Dry	Daylight	No	No	1	0	SECONDARY ROAD	48	MAINLINE	COLUMBIA AVE	10 E		34.07576	-81.15066	32010002600E	I-26 Zone B		1
5668	21278765	21-Sep-21	LEXINGTON	INTERSTATE	26	MAINLINE	INTERSTATE 26	103.632	SECONDARY ROAD	671	MAINLINE	PINEY GROVE RD	0	0	0	No Injury	Median Barrier	Non Collision	Driving too Fast for Conditions	19:39	Tuesday	Wet	Night	No	No	1	0	SECONDARY ROAD	48	MAINLINE	COLUMBIA AVE	3 E		34.07386	-81.14876	32010002600E	I-26 Zone B		1
1685	23241215	5-May-23	LEXINGTON	INTERSTATE	26	MAINLINE	INTERSTATE 26	103.662	SECONDARY ROAD	671	MAINLINE	PINEY GROVE RD	0	0	0	No Injury	Median Barrier	Sideswipe, Same Direction	Improper Lane use/change	20:50	Friday	Dry	Night	No	No	3	0	SECONDARY ROAD	48	MAINLINE	COLUMBIA AVE	50 E		34.07352	-81.14843	32010002600E	I-26 Zone B		1
3141	22292885	15-Nov-22	LEXINGTON	INTERSTATE	26	MAINLINE	INTERSTATE 26	103.693	SECONDARY ROAD	671	MAINLINE	PINEY GROVE RD	0	0	0	No Injury	Median Barrier	Sideswipe, Same Direction	Improper Lane use/change	14:50	Tuesday	Wet	Daylight	No	No	2	0	SECONDARY ROAD	48	MAINLINE	COLUMBIA AVE	10 W		34.07317	-81.14808	32010002600E	I-26 Zone B		1
2083	23219866	26-Feb-23	LEXINGTON	INTERSTATE	26	MAINLINE	INTERSTATE 26	103.713	SECONDARY ROAD	671	MAINLINE	PINEY GROVE RD	0	0	0	No Injury	Median Barrier	Rear End	Driving too Fast for Conditions	18:15	Sunday	Dry	Night	No	No	2	0	SECONDARY ROAD	48	MAINLINE	COLUMBIA AVE	10 W		34.07295	-81.14786	32010002600E	I-26 Zone B		1
1127	23275110	2-Sep-23	LEXINGTON	INTERSTATE	26	MAINLINE	INTERSTATE 26	103.717	SECONDARY ROAD	671	MAINLINE	PINEY GROVE RD	0	0	0	No Injury	Median Barrier	Non Collision	Driving too Fast for Conditions	13:30	Saturday	Dry	Daylight	No	No	1	0	SECONDARY ROAD	48	MAINLINE	COLUMBIA AVE	200 E		34.07291	-81.14781	32010002600E	I-26 Zone B		1
3044	22298685	30-Nov-22	LEXINGTON	INTERSTATE	26	MAINLINE	INTERSTATE 26	103.717	SECONDARY ROAD	671	MAINLINE	PINEY GROVE RD	0	0	1	Possible Injury	Median Barrier	Non Collision	Driving too Fast for Conditions	12:15	Wednesday	Dry	Daylight	No	No	1	0	SECONDARY ROAD	48	MAINLINE	COLUMBIA AVE	70 W		34.07291	-81.14781	32010002600E	I-26 Zone B	1	11
1416	23258181	29-Jun-23	LEXINGTON	INTERSTATE	26	MAINLINE	INTERSTATE 26	103.874	SECONDARY ROAD	671	MAINLINE	PINEY GROVE RD	0	0	0	No Injury	Median Barrier	Rear End	Driving too Fast for Conditions	4:55	Thursday	Dry	Night	Yes	No	2	0	SECONDARY ROAD	48	MAINLINE	COLUMBIA AVE	100 E		34.07115	-81.14606	32010002600E	I-26 Zone B		1
1406	23258729	25-Jun-23	LEXINGTON	INTERSTATE	26	MAINLINE	INTERSTATE 26	103.945	SECONDARY ROAD	671	MAINLINE	PINEY GROVE RD	0	0	0	No Injury	Median Barrier	Non Collision	Driving too Fast for Conditions	9:30	Sunday	Dry	Daylight	No	No	1	0	SECONDARY ROAD	48	MAINLINE	COLUMBIA AVE	35 E		34.07036	-81.14527	32010002600E	I-26 Zone B		1
3414	22275639	24-Sep-22	LEXINGTON	INTERSTATE	26	MAINLINE	INTERSTATE 26	103.98	SECONDARY ROAD	671	MAINLINE	PINEY GROVE RD	0	0	2	Possible Injury	Median Barrier	Sideswipe, Same Direction	Improper Lane use/change	18:45	Saturday	Dry	Daylight	No	No	2	0	SECONDARY ROAD	48	MAINLINE	COLUMBIA AVE	85 E		34.06996	-81.14489	32010002600E	I-26 Zone B	1	11
2045	23221769	5-Mar-23	LEXINGTON	INTERSTATE	26	MAINLINE	INTERSTATE 26	103.994	SECONDARY ROAD	671	MAINLINE	PINEY GROVE RD	0	0	1	Possible Injury	Median Barrier	Rear End	Driving too Fast for Conditions	14:20	Sunday	Dry	Daylight	No	No	3	0	SECONDARY ROAD	48	MAINLINE	COLUMBIA AVE	52 W		34.06981	-81.14473	32010002600E	I-26 Zone B	1	11
5260	21459293	9-Dec-21	LEXINGTON	INTERSTATE	26	MAINLINE	INTERSTATE 26	104.06	SECONDARY ROAD	671	MAINLINE	PINEY GROVE RD	0	0	2	Possible Injury	Median Barrier	Sideswipe, Same Direction	Driving too Fast for Conditions	6:35	Thursday	Wet	Night	No	No	3	0	SECONDARY ROAD	48	MAINLINE	COLUMBIA AVE	1 E		34.06907	-81.14399	32010002600E	I-26 Zone B	1	11
702	23303780	25-Nov-23	LEXINGTON	INTERSTATE	26	MAINLINE	INTERSTATE 26	104.179	SECONDARY ROAD	671	MAINLINE	PINEY GROVE RD	0	0	1	Minor Injury	Median Barrier	Non Collision	Driving too Fast for Conditions	14:00	Saturday	Dry	Daylight	No	No	2	0	SECONDARY ROAD	48	MAINLINE	COLUMBIA AVE	5 W		34.06774	-81.14267	32010002600E	I-26 Zone B	2	17
1962	23226582	22-Mar-23	LEXINGTON	INTERSTATE	26	MAINLINE	INTERSTATE 26	104.343	SECONDARY ROAD	671	MAINLINE	PINEY GROVE RD	0	0	1	Possible Injury	Median Barrier	Sideswipe, Same Direction	Improper Lane use/change	4:30	Wednesday	Dry	Night	No	No	2	0	SECONDARY ROAD	48	MAINLINE	COLUMBIA AVE	238 W		34.06591	-81.14085	32010002600E	I-26 Zone B	1	11
554	23313248	17-Dec-23	LEXINGTON	INTERSTATE	26	MAINLINE	INTERSTATE 26	104.373	SECONDARY ROAD	671	MAINLINE	PINEY GROVE RD	0	0	0	No Injury	Median Barrier	Non Collision	Driving too Fast for Conditions	6:55	Sunday	Wet	Night	Yes	No	1	0	SECONDARY ROAD	36	MAINLINE	SAINT ANDREWS RD	38 E		34.06557	-81.14051	32010002600E	I-26 Zone B		1
2088	23219536	4-Mar-23	LEXINGTON	INTERSTATE	26	MAINLINE	INTERSTATE 26	104.376	SECONDARY ROAD	671	MAINLINE	PINEY GROVE RD	0	0	0	No Injury	Median Barrier	Sideswipe, Same Direction	Driving too Fast for Conditions	15:35	Saturday	Dry	Daylight	No	No	2	0	SECONDARY ROAD	36	MAINLINE	SAINT ANDREWS RD	38 E		34.06554	-81.14048	32010002600E	I-26 Zone B		1
4002	22238726	30-May-22	LEXINGTON	INTERSTATE	26	MAINLINE	INTERSTATE 26	104.581	SECONDARY ROAD	671	MAINLINE	PINEY GROVE RD	0	0	0	No Injury	Median Barrier	Non Collision	Improper Lane use/change	12:25	Monday	Dry	Daylight	No	No	2	0	SECONDARY ROAD	36	MAINLINE	SAINT ANDREWS RD	3 E		34.06327	-81.13816	32010002600E	I-26 Zone B		1
5586	21284587	10-Oct-21	LEXINGTON	INTERSTATE	26	MAINLINE	INTERSTATE 26	104.645	SECONDARY ROAD	671	MAINLINE	PINEY GROVE RD	0	0	0	No Injury	Median Barrier	Sideswipe, Same Direction	Improper Lane use/change	16:30	Sunday	Dry	Daylight	No	No	2	0	SECONDARY ROAD	36	MAINLINE	SAINT ANDREWS RD	50 E		34.06259	-81.13741	32010002600E	I-26 Zone B		1
678	23305844	25-Nov-23	LEXINGTON	INTERSTATE	26	MAINLINE	INTERSTATE 26	104.706	SECONDARY ROAD	671	MAINLINE	PINEY GROVE RD	0	0	0	No Injury	Median Barrier	Rear End	Driving too Fast for Conditions	20:20	Saturday	Dry	Night	Yes	No	3	0	SECONDARY ROAD	36	MAINLINE	SAINT ANDREWS RD	76 E		34.06193	-81.1367	32010002600E	I-26 Zone B		1
1108	23277284	6-Sep-23	LEXINGTON	INTERSTATE	26	MAINLINE	INTERSTATE 26	104.741	SECONDARY ROAD	671	MAINLINE	PINEY GROVE RD	0	0	0	No Injury	Median Barrier	Rear End	Driving too Fast for Conditions	19:30	Wednesday	Dry	Night	Yes	No	2	0	SECONDARY ROAD	36	MAINLINE	SAINT ANDREWS RD	64 E		34.06155	-81.13629	32010002600E	I-26 Zone B		1
1103	23277488	27-Aug-23	LEXINGTON	INTERSTATE	26	MAINLINE	INTERSTATE 26	104.815	SECONDARY ROAD	671	MAINLINE	PINEY GROVE RD	0	0	0	No Injury	Median Barrier	Sideswipe, Same Direction	Improper Lane use/change	16:17	Sunday	Wet	Daylight	No	No	2	0	SECONDARY ROAD	36	MAINLINE	SAINT ANDREWS RD	70 E		34.06075	-81.13543	32010002600E	I-26 Zone B		1
2036	23222317	12-Mar-23	LEXINGTON	INTERSTATE	26	MAINLINE	INTERSTATE 26	105.007	SECONDARY ROAD	671	MAINLINE	PINEY GROVE RD	0	0	0	No Injury	Median Barrier	Non Collision	Driving too Fast for Conditions	5:50	Sunday	Dry	Daylight	No	No	1	0	SECONDARY ROAD	36	MAINLINE	SAINT ANDREWS RD	100 W		34.05869	-81.13318	32010002600E	I-26 Zone B		1
4230	22224045	16-Mar-22	LEXINGTON	INTERSTATE	26	MAINLINE	INTERSTATE 26	105.007	SECONDARY ROAD	671	MAINLINE	PINEY GROVE RD	0	0	0	No Injury	Median Barrier	Rear End	Driving too Fast for Conditions	17:15	Wednesday	Wet	Daylight	No	No	3	0	SECONDARY ROAD	36	MAINLINE	SAINT ANDREWS RD	50 W		34.05869	-81.13318	32010002600E	I-26 Zone B		1
5700	21276501	19-Sep-21	LEXINGTON	INTERSTATE	26	MAINLINE	INTERSTATE 26	105.103	SECONDARY ROAD	671	MAINLINE	PINEY GROVE RD	0	0	0	No Injury	Median Barrier	Non Collision	Improper Lane use/change	16:00	Sunday	Dry	Daylight	No	No	2	0	SECONDARY ROAD	36	MAINLINE	SAINT ANDREWS RD	50 E		34.05766	-81.13205	32010002600E	I-26 Zone B		1
3974	22240587	18-May-22	LEXINGTON	INTERSTATE	26	MAINLINE	INTERSTATE 26	105.127	SECONDARY ROAD	671	MAINLINE	PINEY GROVE RD	0	0	0	No Injury	Median Barrier	Non Collision	Driving too Fast for Conditions	12:00	Wednesday	Dry	Daylight	No	No	1	0	SECONDARY ROAD	36	MAINLINE	SAINT ANDREWS RD	100 E		34.0574	-81.13177	32010002600E	I-26 Zone B		1

APPENDIX B

REFERENCES

NATIONAL DOCUMENTS

SCDOT DOCUMENTS

MASH TL5

RELATED DRAWINGS & KEYWORDS

805-860-05
805-875-10

THIS DRAWING IS ONLY VALID FOR CONSTRUCTION WHEN SEALED AND SIGNED BY A PROFESSIONAL ENGINEER REGISTERED IN THE STATE OF SOUTH CAROLINA. CHECK WWW.SCDOT.ORG FOR LATEST UPDATE.

SOUTH CAROLINA REGISTERED PROFESSIONAL ENGINEER
GEORGE ROBERT BEDENBAUGH, JR.
NO. 19782

SIGNATURE

8/12/2021

DATE

#	DATE	CHK	DESCRIPTION
6	---	---	---
5	---	---	---
4	---	---	---
3	---	---	---
2	---	---	---
1	7/2021	DSO	GENERAL REVISIONS
0	1/2016	DSO	NEW DRAWING

SOUTH CAROLINA DEPARTMENT OF TRANSPORTATION
DESIGN STANDARDS OFFICE
955 PARK STREET
ROOM 405
COLUMBIA, SC 29201

STANDARD DRAWING

RIGID BARRIER BRIDGE PIER PROTECTION MEDIAN APPLICATION

805-860-10

EFFECTIVE LETTING DATE | JANUARY, 2022

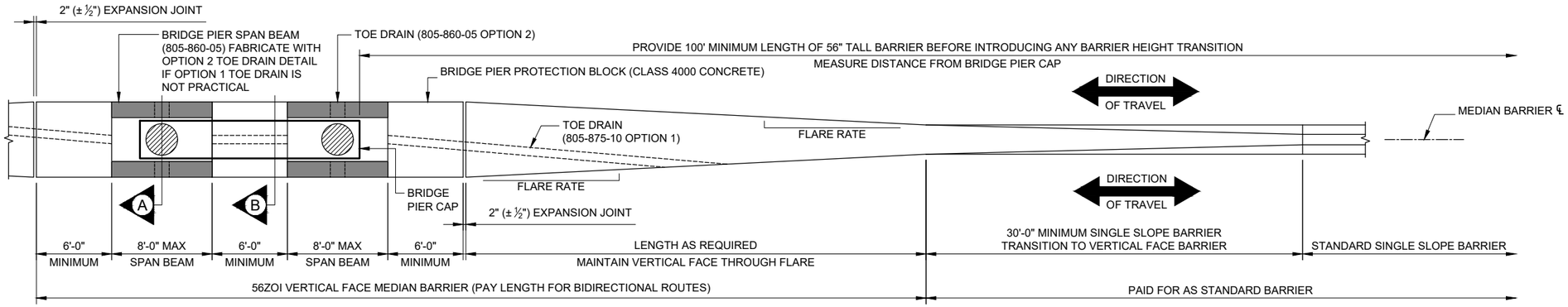

DETAIL 1

SCALE: 1" = 10'-0"
BRIDGE PIER MEDIAN BARRIER
USE THIS DETAIL FOR ROUTES SUBJECT TO LANE REVERSALS

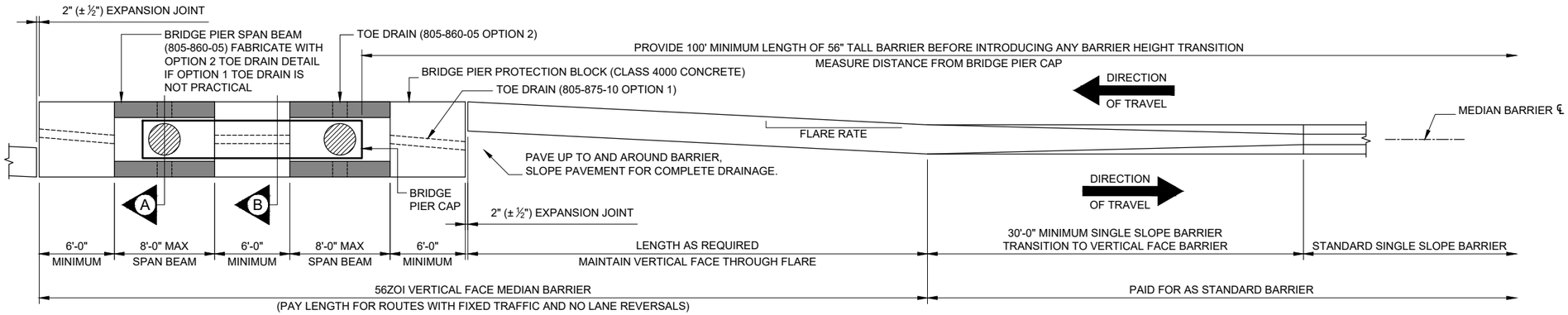

DETAIL 2

SCALE: 1" = 10'-0"
BRIDGE PIER MEDIAN BARRIER
USE THIS DETAIL FOR ROUTES NOT SUBJECT TO LANE REVERSALS

1. SEE 805-800-XX FOR GENERAL NOTES AND PAYMENT INFORMATION. WORK ALL APPROPRIATE DRAWINGS TOGETHER.

PAY ITEMS:
8058600 56ZOI VF BARRIER MEDIAN SYSTEM.....LF

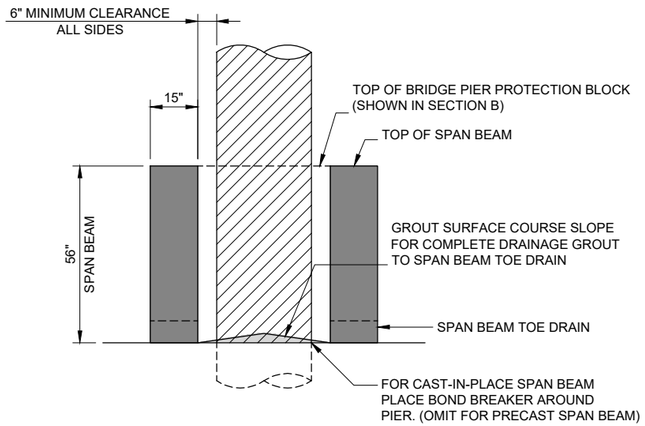

SECTION A

SCALE: 1/4" = 1'-0"
BRIDGE PIER PROTECTION SPAN BEAM

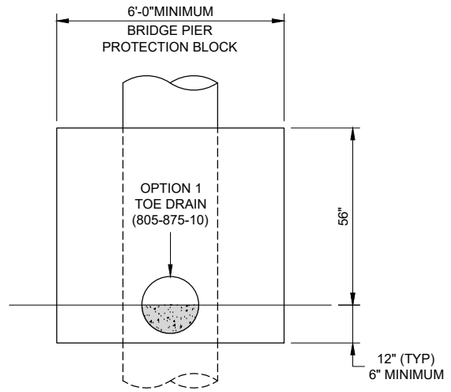

SECTION B

SCALE: 1/4" = 1'-0"
BRIDGE PIER PROTECTION BLOCK

LIMITATIONS

STAGED TRAFFIC CONDITION: USE ONLY DETAIL 1 IF LOCATION IS SUBJECT TO OPPOSITE DIRECTION TRAFFIC DURING CONSTRUCTION.
LANE REVERSAL: USE ONLY DETAIL 1 IF CORRIDOR IS SUBJECT TO PERIODIC LANE REVERSALS.
GORE AREAS: USE ONLY DETAIL 1 ON LEADING END AND DETAIL 1 OR 2 ON TRAILING END. DEPENDENT ON LANE REVERSALS.
STANDARD MEDIAN WITH NO LANE REVERSALS OR STAGED TRAFFIC: USE ONLY DETAIL 2.
ROADSIDE (WITH FRONTAGE ROAD): USE ONLY DETAIL 1 FOR BOTH LEADING AND TRAILING ENDS.
ROADSIDE (NO FRONTAGE ROAD): SEE 805-860-20 OR 805-860-25.